Haleson

V2X Sanitary Ball Valve

Technical Data

Maximum Operating Pressure 1/2'' to 2''	1,000 PSI (69 bar) at ambient temperature
Maximum Operating Pressure 2-1/2'' and 4''	800 PSI (55 bar) at ambient temperature
Operating Temperature Range	-20°C to 150°C
Wetted Parts Material	SS316L (CF3M) / PTFE
Internal Surface Finish	20Ra (Std.) or 15Ra
Features	Solid ball, Blow-out proof stem; Manual Locking Lever;
Certification	3A

Pressure - Temperature Rating

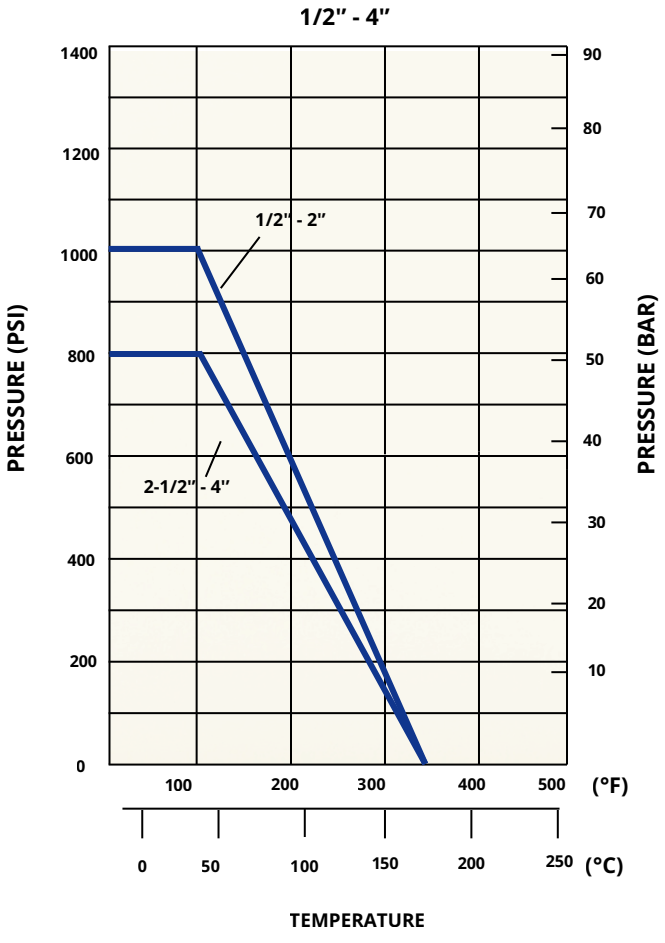



V2X Sanitary Ball Valve

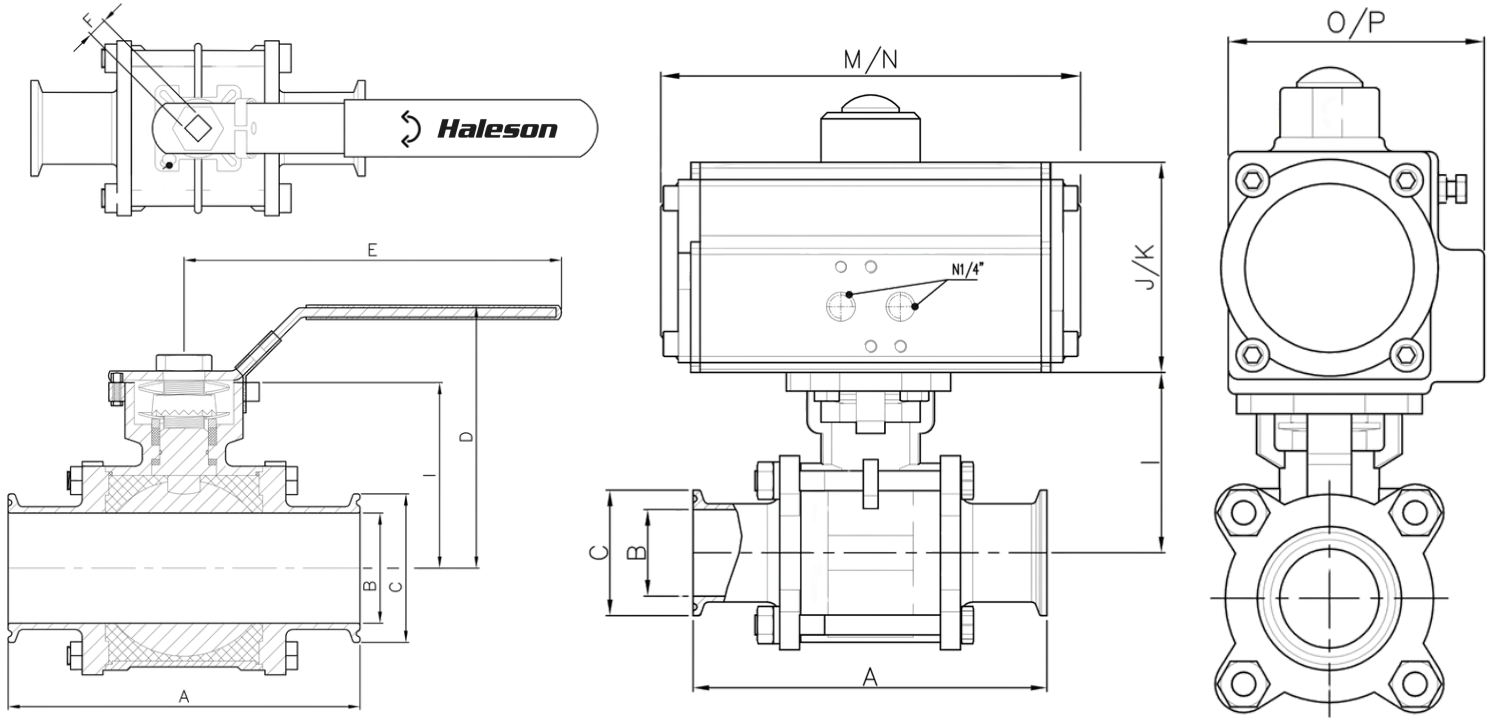

Dimensions

Size	A	B	C	D	E	F	G	H	I	J / K SR / DA	M / N SR / DA	O / P SR / DA	Single Acting Actuator	Double Acting Actuator
1/2"	90.5	9.4	25.2	64	131	9	F03	F04	37	72 / 72	148 / 148	71.5 / 715	HS52SR	HS52DA
3/4"	103.4	15.75	25.2	68	131	9	F03	F04	43	72 / 72	148 / 148	71.5 / 715	HS52SR	HS52DA
1"	114.4	22.1	50.5	86	169	11	/	F05	51	99.5 / 109	186 / 212	95 / 103	HS75SR	HS83DA
1.5"	136.7	34.8	50.5	122.5	213	14	/	F07	71	133 / 109	272 / 212	121.5 / 103	HS105SR	HS83DA
2"	153.2	47.5	64	122.5	213	14	/	F07	79	133 / 109	272 / 212	121.5 / 103	HS105SR	HS83DA
2.5"	167.3	60.2	77.5	139.5	213	14	F07	F10	94	133 / 155	272 / 306	121.5 / 142	HS105SR	HS125DA
3"	192.3	72.9	91	165	320	17	F07	F10	109.5	172 / 155	398 / 306	152.5 / 142	HS140SR	HS125DA
4"	239.5	97.4	119	177	320.0	17	F07	F10	123	172 / 155	398 / 306	152.5 / 142	HS140SR	HS125DA
6"	378	146.8	167	205	490	27	F10	F12	169	230 / 197	534 / 456	206 / 174	HS190SR	HS160DA

Dimensions in mm

V2X Sanitary Ball Valve

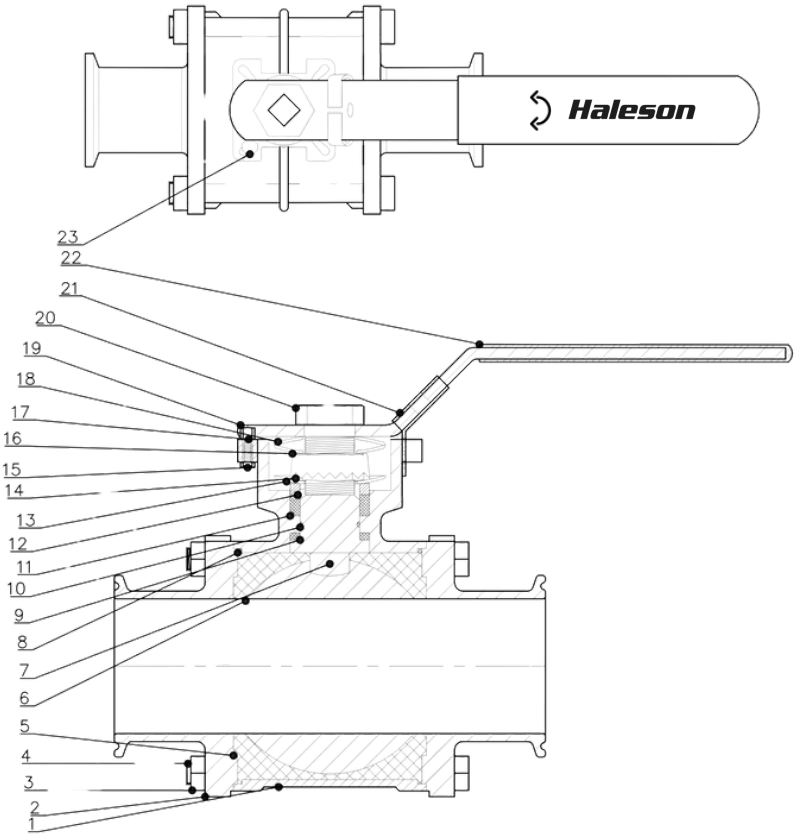

Bill of Materials

No.	Name	Number	Material
1	Body	1	ASTM-A351-CF3M
2	Cap	2	ASTM-A351-CF3M
3	Hexnut	4	SS304
4	Bolt	4	SS304
5	Seat	2	PTFE
6	Ball	1	SS316L
7	Stem	1	SS316L
8	Stem packing	2	PTFE
9	Ring	1	PTFE
10	O-Ring	1	VITON
11	Thrust washer	3	PTFE
12	Gasket	1	SS304
13	Butterfly spring	1	SS304
14	Hexnut	1	SS304
15	Hexnut	1	SS304
16	Bellevue washer	1	SS304
17	Bolt	1	SS304
18	Butterfly spring	2	SS304
19	Handle	1	SS304
20	Handle nut	1	SS304
21	Lock washer	1	SS304
22	Handle cover	1	PLASTIC
23	Stop pin	1	SS304

Configuration - How to Order

END CONNECTIONS

TRI-CLAMP	=	TC
WELD	=	WE

SEAT MATERIAL

PTFE	=	PT

ACTUATION

MANUAL LOCKING LEVER	=	MA
SPRING-RETURN ACTUATOR	=	SR
DOUBL-ACTING ACTUATOR	=	DA

V2X – TC – ___ – ___ – ___ – ___ – ___

SERIES

SEATS

CAVITY - FILLED	=	CF
NON CAVITY - FILLED	=	NF

INTERNAL SURFACE FINISH

20Ra	=	20
15Ra	=	15

SPECIAL OPTIONS

ELECTROPOLISHED WETTED PARTS	=	EP
CLEANED FOR OXYGEN SERVICE	=	OX