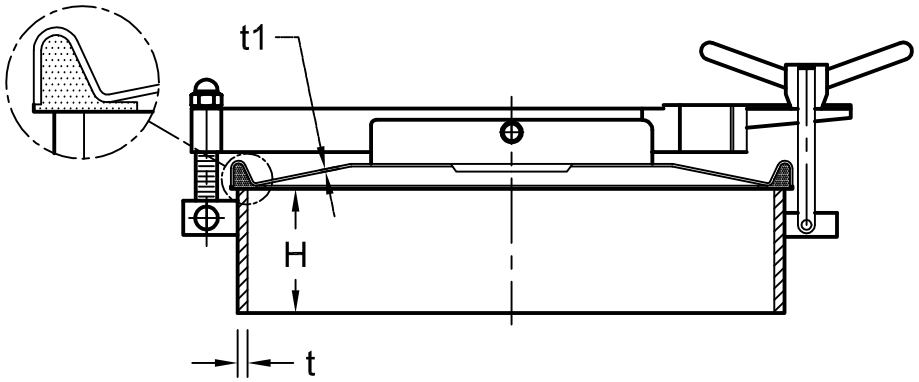

DATA TABLE

SIZE		OD	t	H	t1	MAX Pressure
in	mm	L2xL1	mm	mm	mm	Bar
9.3"x7.3"	235x185	235x185	5	70	1.5	1.5
17.1"x13.2"	435x335	435x335	8	80	3	0.5
21.1"x17.1"	535x435	535x435	10	100	3	0.3
27.6"x19.7"	700x500	700x500	12	100	3	0.1

Maximum Pressure at Ambient Temperature

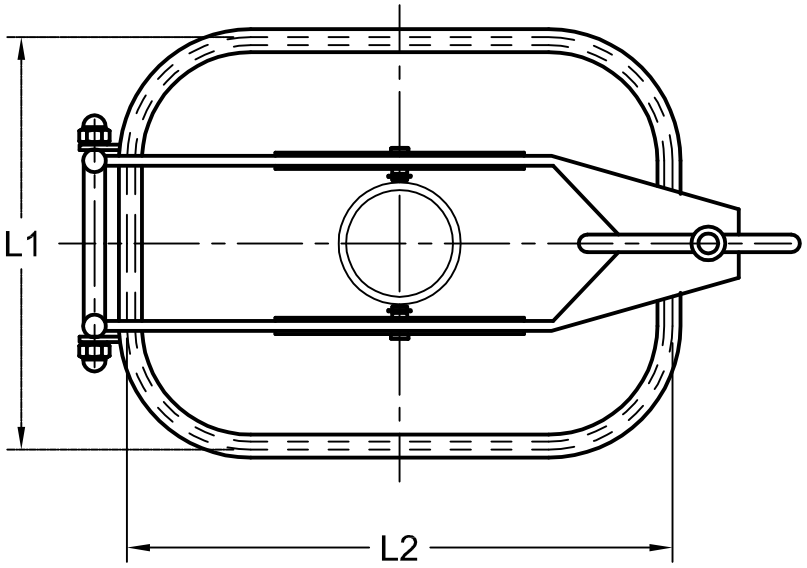

NOTES:
1. ALL DIMENSIONS ARE FOR REFERENCE ONLY.
2. DRAWING IS NOT TO SCALE AND FOR REFERENCE ONLY.
3. SANITARY POLISH INSIDE/OUTSIDE.

REQUIRED BY CUSTOMER

SIZE	QTY	MATERIAL		SEAL		APPROVAL SIGNATURE
		SS304	SS316L	SILICONE	EPDM	

HS

TITLE: HS-13016/SS
RECTANGULAR MANWAY
WITH PRESSURE

ONE LOCK DESIGN

Sanitaire / Biopharma / Industriel
WWW.HALESONINC.COM
Tel. (450) 686-6663 Fax. (450) 686-7776

SIZE	DRAWING NO.	REV
A	HS-13016/SS	0

SCALE: NONE | DATE: 21 FEBRUARY 2019 | SHEET 1 OF 1